IP-HD Thermal Long Range PTZ Speed Dome Series

Model: **iV-TH-PTZMLZ-50X-iP3**

iV-Pro Model: iV-TH-PTZMLZ-50X-iP3 is a Outdoor Thermal 2 Megapixel 1080p Full iP-HD Long range PTZ Security Camera with the next generation Sony 307 Starlight HD Series image processing solution engineered to provide extremely crisp and clear images at minimal bandwidth. It is integrated with high focus optical zoom with defog functions, passive infrared image detector and high precision 360°panoramic controls along with double spectral and 24 hours visible monitoring under low illumination, even with bad haze weather at night. The machine body adopts high strength anti-vibration alloy die-casting shell, anti-spraying, thermal insulation, high/cold temperature resistance, impact and corrosion resistance military grade design. This is a non Poe Thermal technology camera with dual lens, with multiple views at the same time of Day and Thermal Vision.

Features

- 2 Megapixel 1080p HD Resolution with Smart Thermal up to 8KM
- Long range with up to 5KM day time detection and 8KM Thermal
- Latest Generation Uncooled Vox Thermal Core 640X512 Pixels
- High Speed 360 degree with 50X Optical and 100mm 4X Thermal Lens
- Plug and Play Compatible with iV-Pro's range of NVRs
- Long range of Vehicle and Human Detection with SD Card Storage
- Outdoor T type Shock absorption Dual spectral all weather Camera
- Military grade module design structure with bracket for Outdoor use

Technical Specifications:

Model	**Model No.**	**iV-TH-PTZMLZ-50X-iP3**
	Type	Outdoor T Style Double Spectral All-in-One Network IP camera
Camera Module	Sensor	Sony 307 Starlight High Performance Chipset
	Camera Module	50X Optical Pro High Precision Zoom Camera Module
	Resolution	Full HD/1080p
	Frame Rate	25/30fps
	Min. illumination	Color：0.002Lux @(F1.5,AGC ON), ICR ON B/W：0.0001 Lux @(F1.5,AGC ON), ICR OFF
	WDR	Supported
	Day/Night Mode	Automatic/Color/B&W
	3D DNR	Digital DNR
	Focus Model	Auto Focus AF, ZF (Zoom Trigger AF), Manual Focus(MF)
	Defog	Electronic Defog
	Control	Auto White Balance, Auto Gain Control, Auto Exposure, Auto Iris Correction (AWB/AGC/AE/AIC)
	BLC	Supported
	HLC	Supported
	Video Compression	H.265+ / H.264 / MJPEG
Video	Audio Compression	G.711(ALAW)/MP2 /G.711(MULAN)
	Resolution	Color: Full HD/1080P(1920x1080)
	Image Effects	Rotation, Mirror and Self-defined Image Mode
	OSD	Multiple Zone Smart OSD, Support Multi-line Characters, Font Size, Color, Location can be Customized
	3D Position Control	Draw the Areas through by mouse, Auto focus to CFOV
	Horizontal Range	360°Continuous Rotation
Pan &Tilt	Horizontal Speed	Horizontal Keyboard Control: 0°~80°/s
	Vertical Range	-90°~+90°
	Vertical Speed	Vertical Keyboard Control: 0°~60°/s
	Preset	300
	Preset Stop Accuracy	±0.01 Degree
	Preset Cruise	8 Cruise Groups(Support to Add 32 Presets for Each Group)
	Pattern Scan	8 self-learning path, with speed memory, each path can be recorded for 10 minutes
	Two Points Scan	4 Paths, Available to Set the Position and Speed of Scanning
	360°Scan	1 Path, Available to Set the Speed of Rotation
	Horizontal/Vertical Scan	4 Paths, Available to Set Independently the Speed of Rotation
	Azimuth Angle	Supported
	Power off Memory	Supported
	Wiper	Supported
	Remotely Restart	Supported
	Communication	Pelco D & Pelco P; Baud Rate from 2400bps to 19200bps for optical, RS485 control
Thermal	**Sensor Type**	**Latest Gen. Uncooled Vox Thermal Core**
	Thermal Lens	**0.058mrad (100mm lens)**
	Image Process	**Digital Detail Enhancement (DDE)**
	Spectral Band	**7.5 ~ 13.5µm**
	Pseudo Color	**White, hot-black, hot-Bright, Medical-Steel, Arctic-Rainbow**

	Defog	**Supported**
	Field of View	**2.3°(H) ×1.9°(V)**
	Dynamic ROI	Dynamic ROI Setting, Support to Set Fixed Area or Dynamic Tracking Separately
	Intelligent Alarm	Network Disconnection Detection, IP Conflict Detection, SD Card Storage Detection, Storage Space Detection
	Timing Cruise	Timing Invoke Preset, Pattern Scan Path, Preset Cruise Grouped
	Watch Function	Supports return to the Specified Preset Point After the Specified idle State time, Support preset, Track, Horizontal Scan
	3D Position	Supported
	Long Focus Speed Limit	PTZ Rotation Speed depends on the Optical Zoom Adjustment, Limit the speed rate of PTZ control when the Lens zoom to Long Focus
	Other	One Key to Restore Factory settings, Anti-flicker, Triple code Stream
	Protocol	IPv4、TCP/IP、UDP、HTTP、DHCP、RTP/RTCP、FTP、UPnP、DDNS、NTP、IGMP、ICMP
Network	Compatible	GB/T 28181
	Security Mode	Password Protection, Multilevel users access
	User Maintenance	Remote Maintenance can be Achieved Through Network Remote Upgrade
	Log Management	Support Log Management, provides operational Logs, Alarm Logs, records of wrong Log and Query
	API Integration	Supports micro SDHC/SDXC, TF off line storage(optional), Video Clip and Snapshot(optional), Platform support events recording ,second intelligent retrieval and Analysis .
	Communication Port	1*RJ45 10M/100M Adaptive Ethernet, Double Channel Fusion and Single IP Output
Interface	Power Port	Supported with RS485 terminal
	Others	Alarm in/out, Audio, Storage interface, Analog video Output Ports are Optional
	Working Temperature	-40℃~+65℃
Generally	Environment Humidity	＜90%RH (No Condensation)
	Static/Surge Protection	TVS6000V Lightning Protection and Surge Protection, Comply with GB/T17626.5 Standard
	PTZ Protection Level	IP66
	Power Supply	AC24V/2.5A or DC12V/3.5A (optional), DC10.5V～DC18V/3.5A (for car surveillance)
	Watts	Normal Operation≤30W, Start-up Peak≤40W
	Weight	Approximate 7.5Kg
	Bracket	Shock Absorption Bracket, Can be Vehicle Mounted
Thermal Detection	**Detection range**	**Vehicle Detection - 8KM, Human Detection - 4KM**
	Recognize range	**Vehicle Recognize - 4KM, Human Recognize - 2.5KM**
	Identify range	**Vehicle Identification - 2.3KM, Human Identification - 1.2KM**

info@ivpro.in www.ivpro.in

scan this QR Code

Customer Care
care@ivpro.in

Specifications are subject to change without notice.
iV-Pro is a trademark of iView Technologies Co, India & Hongkong.
Copyright 2017 iView Technologies Co. All rights reserved.

Thermal Images:

Dimensions Diagram:

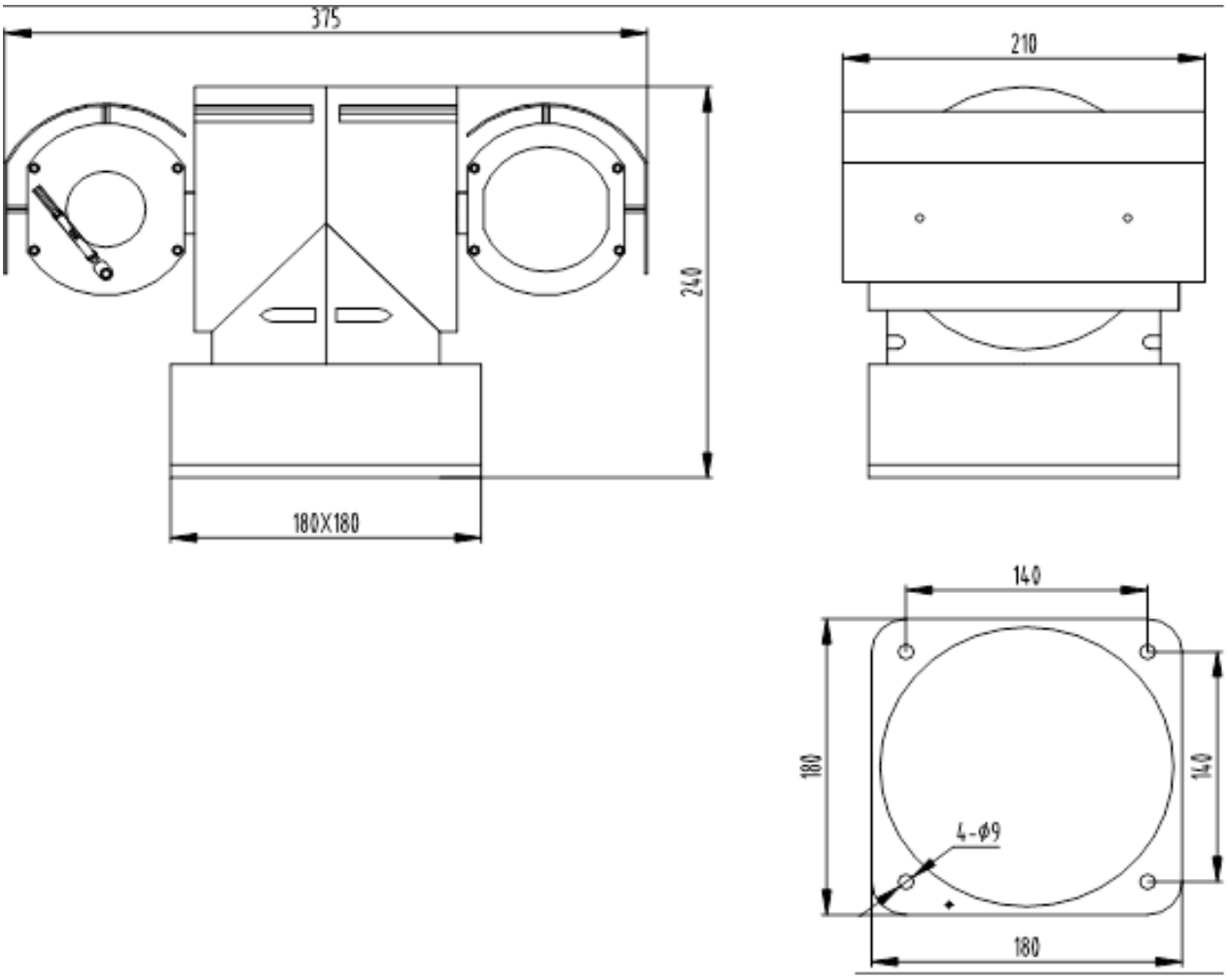

info@ivpro.in www.ivpro.in

Customer Care
care@ivpro.in

scan this QR Code

Specifications are subject to change without notice.

iV-Pro is a trademark of iView Technologies Co, India & Hongkong.
Copyright 2017 iView Technologies Co. All rights reserved.